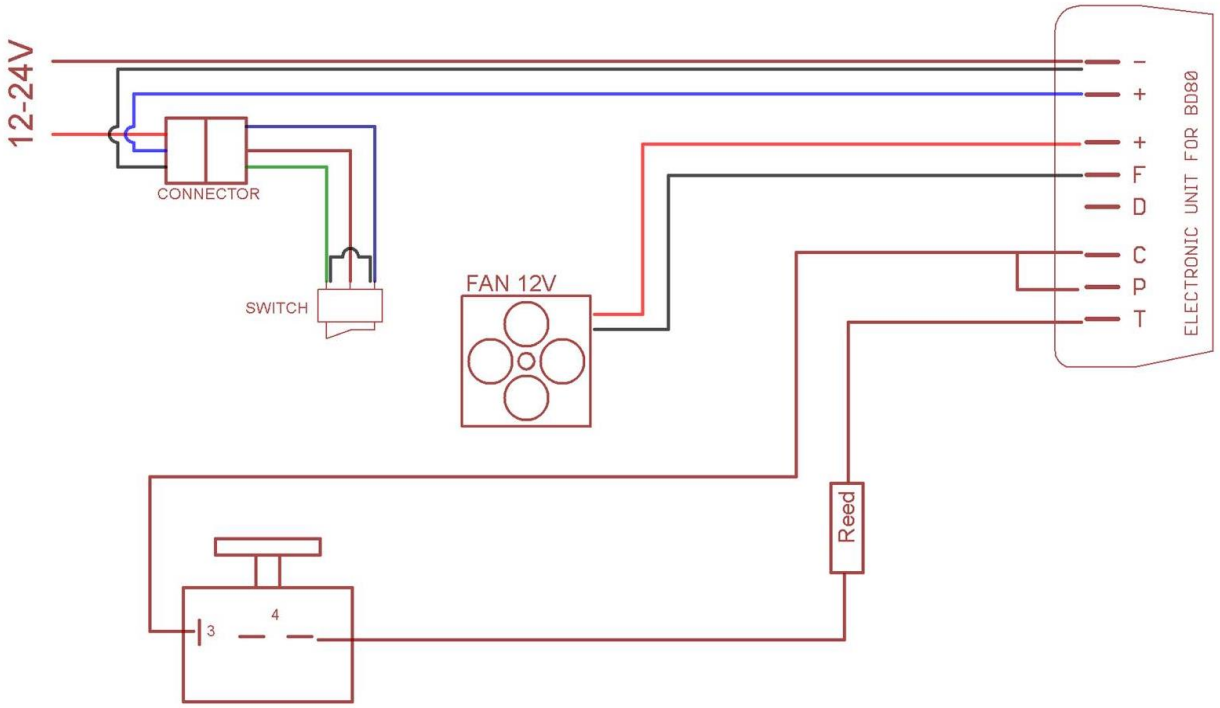
12-24V
CONNECTOR
SWITCH
FAN 12V
Reed
3
4
-
+
+
F
D
C
P
T
ELECTRONIC UNIT FOR BD80